PROJECT REQUIREMENTS

ALL CONSTRUCTION SHALL BE IN COMPLIANCE WITH ALL CODES LISTED IN "CODE INFORMATION."

ALL WORK RELATING TO THIS CONSTRUCTION SHALL COMPLY WITH U.S. DEPARTMENT OF LABOR, THE OCCUPATIONAL SAFETY AND HEALTH STANDARDS AND ALL RELATED LOCAL BUILDING CODES AND ORDINANCES.

DO NOT SCALE THE DOCUMENTS.

ALL DIMENSIONS ARE TO BE FIELD VERIFIED AND BACK CHECKED FOR CORRECTNESS. IF ANY DEVIATIONS OR DISCREPANCIES OCCUR, CONTACT THE ARCHITECT FOR VERIFICATION PRIOR TO PROCEEDING WITH THE WORK.

THE GENERAL CONTRACTOR AND ALL SUBCONTRACTORS SHALL CAREFULLY REVIEW THE DRAWINGS, SPECIFICATIONS, DETAILS AND NOTES FOR INFORMATION REGARDING THE SCOPE OF THE WORK INTENDED PRIOR TO PROCEEDING WITH THE WORK.

THE GENERAL CONTRACTOR SHALL COORDINATE ALL LOCKING HARDWARE WITH THE OWNER PRIOR TO INSTALLATION.

CONTRACTOR SHALL VERIFY LOCATIONS AND QUANTITY OF FIRE EXTINGUISHERS WITH THOSE SHOWN ON PLANS BEFORE INSTALLATION.

ALL WOOD INDICATED IN THESE DOCUMENTS IS TO BE TREATED FOR FIRE RETARDANCY UNLESS NOTED OTHERWISE. PRESSURE TREAT ALL ROOF BLOCKING AND PLYWOOD AT PARAPETS.

INTERIOR DIMENSIONS ARE FROM FACE OF GYP. BOARD TO FACE OF GYP. BOARD UNLESS NOTED OTHERWISE.

CONCRETE FLOOR SLABS SHALL BE INSTALLED AND FINISHED AS REQUIRED TO RECEIVE THE SCHEDULED FINISH MATERIAL. NO CURING COMPOUND SHOULD BE UTILIZED ON CONCRETE TO RECEIVE TILE. SPECIAL ATTENTION SHOULD BE PAID TO THE CONCRETE SLAB RECEIVING PORCELAIN, OR CERAMIC, TILE AND THE RECOMMENDATIONS OF THE CERAMIC TILE INSTITUTE OF AMERICA SHALL BE STRICTLY ADHERED TO. THE ARCHITECT, IN CONJUNCTION WITH THE FLOOR TILE SUBCONTRACTOR, SHALL ESTABLISH LOCATIONS OF CONCRETE FLOOR SLAB CONTROL JOINTS SO AS TO MINIMIZE CUTTING OF FLOOR TILE.

ACCESS PANELS (2'X2') SHALL BE PROVIDED IN ALL GYP. BOARD PARTITIONS OR CEILING WHERE ELECTRICAL TRANSFORMERS, J-BOXES, PLUMBING VALVES, HVAC VAV BOXES, PTB BOXES, MOTORIZED DAMPERS, VOLUME DAMPERS, FIRE DAMPERS, SANITARY SEWER OR GREASE LINE TRAPS REQUIRING ACCESS LOCATED. NOTE THAT MANY OF THESE ITEMS ARE NOT INDICATED ON THESE DOCUMENTS, BUT ACCESS PANELS SHALL BE PROVIDED AS THOUGH THEY HAVE BEEN SHOWN THROUGHOUT (BURDEN OF DETERMINING QUANTITY IS ON THE CONTRACTOR). THE ARCHITECT SHALL COORDINATE THESE ACCESS PANELS WITH THE CONTRACTOR AT A LATER DATE SO AS TO MINIMIZE THE IMPACT ON AESTHETIC DESIGN OF THE PROJECT. ACCESS PANELS LOCATED IN FIRE RATED PARTITIONS OR CEILINGS SHALL HAVE THE SAME FIRE RATING (U.L. LABEL) AS THE PARTITION OR CEILING IN WHICH THEY ARE HOUSED. THE CONTRACTOR SHALL LOCATE ALL ELEMENTS WHICH REQUIRE ACCESS ABOVE NON-PUBLIC AREA CEILINGS OR ABOVE LAY-IN ACOUSTICAL TILE CEILINGS, IF POSSIBLE. THE CONTRACTOR SHALL PROVIDE A MARKED-UP PLAN TO THE ARCHITECT AND OWNER SHOWING ALL AREAS REQUIRING ACCESS.

THE CONTRACTOR SHALL REVIEW THE CIVIL DOCUMENTS, THE SOIL REPORT, AND THESE DOCUMENTS (ALL IN THEIR ENTIRETY) TO INSURE THAT ALL REQUIRED EARTHWORK, PAVING, CURB AND STRUCTURAL SLAB WORK IS FULLY COVERED IN THE SCOPE OF THE CONTRACTOR'S BID. CONTRACTOR SHALL FULLY COORDINATE ALL OF THE ABOVE REFERENCED WORK WITH THE OWNER'S REPRESENTATIVE, THE ARCHITECT AND CIVIL ENGINEER TO INSURE THAT ALL WORK IS FULLY COORDINATED AND COMPLETED.

ALL PENETRATIONS THROUGH FIRE RATED PARTITIONS, FIRE RATED CEILING ASSEMBLIES SHALL BE INSTALLED ACCORDING TO U.L. STANDARDS AND PER APPLICABLE CODES FOR REQUIRED HOUR FIRE RATED CONSTRUCTION.

ALL MATERIALS SHALL BE INSTALLED ACCORDING TO INDUSTRY STANDARDS, ALL AGENCIES OR "STANDARD" RECOMMENDATIONS REFERENCED IN THE SPECIFICATIONS, OR MANUFACTURERS RECOMMENDED INSTALLATION PROCEDURES, WHICHEVER IS THE MOST STRINGENT, IN ORDER TO PROVIDE A COMPLETE AND HIGH QUALITY PROJECT.

THE CONTRACTOR REPRESENTS AND WARRANTS THAT IT HAS EXAMINED THE PLANS, DRAWINGS, SPECIFICATIONS AND ALL CONSTRUCTION CRITERIA OF OWNER AND HAS SATISFIED ITSELF THAT THE INFORMATION CONTAINED THEREIN IS SUFFICIENT TO FULLY AND COMPLETELY CONSTRUCT THE PROJECT.

PRIOR TO SUBMITTING A PROPOSAL, BIDDERS SHALL CAREFULLY EXAMINE THE DRAWINGS AND PROJECT MANUAL, VISIT THE SITE OF THE WORK, AND FULLY INFORM THEMSELVES AS TO ALL EXISTING CONDITIONS AND LIMITATIONS, AND SHALL INCLUDE IN THE PROPOSAL A SUM TO COVER THE COST OF ALL ITEMS INCLUDED IN THE CONTRACT. THE BIDDER, IF AWARDED A CONTRACT, SHALL NOT BE ALLOWED ANY EXTRA COMPENSATION BY REASON OF ANY MATTER OR THING, CONCERNING WHICH SUCH BIDDER MIGHT HAVE FULLY INFORMED HIMSELF PRIOR TO BIDDING.

SHOULD A BIDDER OR CONTRACTOR FIND ANY AMBIGUITY, INCONSISTENCY, QUESTION, CONCERN OR ERROR IN THE DRAWINGS OR PROJECT MANUAL, OR SHOULD HE BE IN DOUBT AS TO THEIR MEANING, HE SHALL AT ONCE NOTIFY THE ARCHITECT, IN WRITING, WHO WILL ISSUE A WRITTEN INTERPRETATION.

REQUESTS FOR CONSIDERATION OF SUBSTITUTION OF MANUFACTURERS, MATERIALS OR TRADE NAMES SHALL BE IN WRITING AND SHALL CLEARLY IDENTIFY:
- NAME OF SPECIFIED MATERIAL
- NAME OF PROPOSED SUBSTITUTION
- DEMONSTRATION OF COMPLIANCE WITH ALL CODE AND PROJECT REQUIREMENTS
- DETAILED COMPARISON OF SPECIFIED MATERIAL AND PROPOSED SUBSTITUTION
- RESEARCH/EVALUATION REPORTS
- COST INFORMATION INCLUDING A PROPOSAL OF CHANGE IN CONTRACT SUM
- WAIVER OF RIGHTS TO ADDITIONAL PAYMENT OR TIME THAT MAY BECOME NECESSARY IF SUBSTITUTION IS ACCEPTED
- COMPLETE LIST OF AFFECT THAT PROPOSED SUBSTITUTION WILL HAVE ON ALL WORK AND TRADES.
- LIST OF FIVE (5) SIMILAR PROJECT INSTALLATIONS WHERE SUBSTITUTION WAS IMPLEMENTED
- GENERAL CONTRACTOR'S CERTIFICATION AND SUBCONTRACTOR'S CERTIFICATION THAT PROPOSED SUBSTITUTION COMPLIES WITH THE REQUIREMENTS OF THE PROJECT, ALL APPLICABLE CODES AND ORDINANCES, AND IS APPROPRIATE FOR INTENDED APPLICATIONS.

IF CONTRACTOR OBSERVES ANY ERRORS DISCREPANCIES, OMISSIONS, AMBIGUITIES OR INCONSISTENCIES IN THE CONTRACT DOCUMENTS, HE SHALL PROMPTLY NOTIFY THE ARCHITECT IN WRITING REQUESTING CLARIFICATION. IF CONTRACTOR PROCEEDS WITH WORK AFFECTED BY SUCH ERRORS, DISCREPANCIES, AMBIGUITIES, OMISSIONS OR INCONSISTENCIES WITHOUT RECEIVING WRITTEN CLARIFICATION, HE DOES SO SOLELY AT HIS OWN RISK. ANY ADJUSTMENTS INVOLVING SUCH CIRCUMSTANCES MADE BY THE CONTRACTOR, PRIOR TO RESOLUTION BY ARCHITECT, SHALL BE AT THE CONTRACTOR'S SOLE EXPENSE.

IN GENERAL, THE DRAWINGS INDICATE DIMENSIONS, POSITIONS AND DETAILS OF CONSTRUCTION; THE SPECIFICATIONS DESCRIBE QUALITIES OF MATERIAL AND METHODS OF WORKMANSHIP. ALL WORK DESCRIBED IN THE SPECIFICATIONS SHOWN ON THE DRAWINGS AND ALL WORK DEPENDENT UPON OR NECESSARY, SHALL BE EXECUTED IN A WORKMANLIKE MANNER AND SHALL BE OF MATERIALS BEST ADAPTED TO THE PURPOSE WHERE SUCH WORK OR MATERIALS ARE NOT SPECIFICALLY MENTIONED.

DO NOT SCALE DRAWINGS.

SHOULD CONFLICTS ARISE IN OR BETWEEN DRAWINGS AND SPECIFICATIONS, THE CONTRACTOR IS DEEMED TO HAVE ESTIMATED ON THE MORE EXPENSIVE UNLESS HE HAS REQUESTED AND OBTAINED A WRITTEN DECISION FROM THE ARCHITECT BEFORE SUBMISSION OF HIS PROPOSAL AS TO WHICH METHODS AND/OR MATERIALS WILL BE REQUIRED.

ALL WORK AND MATERIALS SHALL BE OF THE BEST RESPECTIVE KINDS SPECIFIED AND INDICATED. SHOULD ANY WORKMANSHIP OR MATERIALS BE REQUIRED WHICH ARE NOT DIRECTLY OR INDIRECTLY CALLED FOR IN THE SPECIFICATIONS AND/OR THE DRAWINGS, BUT WHICH ARE NECESSARY FOR PROPER FULFILLMENT OF THE INTENT THEREOF, SAID WORKMANSHIP AND/OR MATERIALS SHALL BE THE SAME AS SIMILAR PARTS THAT ARE DETAILED, INDICATED OR SPECIFIED, AND THE CONTRACTOR SHALL UNDERSTAND THE SAME TO BE IMPLIED AND PROVIDE IT AS FULLY AS IF IT WERE PARTICULARLY DESCRIBED OR DELINEATED.

THE USE OF DRAWINGS AND SPECIFICATIONS AND ANY PART THEREOF IS EXPRESSLY LIMITED TO THE ORIGINAL PROJECT FOR WHICH THEY WERE INTENDED. REUSE, REPRODUCTION OR PUBLICATION BY ANY METHOD, IN WHOLE OR IN PART, IS PROHIBITED, TITLE TO DRAWINGS AND SPECIFICATIONS REMAIN WITH THE ARCHITECT WITHOUT PREJUDICE. VISUAL CONTACT WITH THE DRAWINGS AND SPECIFICATIONS, IN WHOLE IN PART, SHALL CONSTITUTE PRIMA FACIE EVIDENCE OR ACCEPTANCE OR THESE RESTRICTIONS.

CONTRACTOR SHALL COMPLY WITH, AND REQUIRE ALL SUBCONTRACTORS TO COMPLY WITH FEDERAL, STATE AND LOCAL CONTRACTOR'S LICENSE LAWS.

MAPS, SURVEYS, SOILS INVESTIGATION REPORTS AND SIMILAR REFERENCE DATA MADE AVAILABLE TO THE CONTRACTOR ARE GIVEN FOR THE CONTRACTOR'S INFORMATION ONLY, AND NEITHER THE OWNER NOR THE ARCHITECT ASSUME ANY RESPONSIBILITY FOR CONCLUSIONS THE CONTRACTOR MAY DRAW THEREFROM.

THE DRAWINGS REPRESENT THE BUILDING, THEY DO NOT REPRESENT THE MEANS, METHODS, PROCEDURES, TECHNIQUES OR SEQUENCES OF CONSTRUCTION.

WHEN REQUESTED BY THE ARCHITECT AND OR REQUIRED BY THE CONTRACT DOCUMENTS, THE CONTRACTOR SHALL DELIVER TO THE ARCHITECT SIGNED CERTIFICATES FROM SUPPLIERS OF MATERIALS AND MANUFACTURED ITEMS STATING THAT SUCH ITEMS CONFORM TO THE CONTRACT DOCUMENTS AND PROJECT REQUIREMENTS.

SHOP DRAWINGS SHALL NOT BE USED AS A MEANS OF REQUESTING SUBSTITUTION OF PRODUICTS OR MATERIALS, OR AS A MEANS OF REQUESTING CHANGE IN CONTRACT DOCUMENTS.

LABOR SHALL BE PERFORMED IN BEST, MOST WORKMANLIKE MANNER, BY MECHANICS SKILLED AND EXPERIENCED IN THEIR RESPECTIVE TRADES. STANDARDS FOR WORK REQUIRED THROUGHOUT SHALL BE OF SUCH A GRADE AS WILL RESULT IN FIRST-CLASS WORK.

MECHANICS WHOSE WORK OR DEMEANOR IS UNSATISFACTORY TO THE OWNER OR ARCHITECT, OR IS CONSIDERED BY THE OWNER OR ARCHITECT TO BE CARELESS, INCOMPETENT, UNSKILLED OR OTHERWISE OBJECTIONABLE SHALL BE DISMISSED FROM THE WORK UPON WRITTEN OR VERBAL REQUEST FROM THE OWNER OR ARCHITECT.

THE CONTRACTOR SHALL, BEFORE COMMENCING WORK, VERIFY ALL GRADES, LINES, LEVELS AND DIMENSIONS AND REPORT ANY ERRORS OR INCONSISTENCIES IN WRITING TO THE ARCHITECT. THE CONTRACTOR SHALL NOT PROCEED UNTIL SUCH ERRORS OR INCONSISTENCIES ARE RESOLVED. THE CONTRACTOR SHALL ESTABLISHED AND MAINTAIN ALL BUILDING(S) AND CONSTRUCTION GRADE LINES, LEVELS AND BENCH MARKS AND SHALL BE RESPONSIBLE FOR ACCURACY AND PROTECTION OF SAME. THIS WORK SHALL BE PERFORMED BY A LICENSED CIVIL ENGINEER OR REGISTERED LAND SURVEYOR.

THE CONTRACTOR SHALL PROJECT ALL TEMPORARY BENCH MARKS AND MAINTAIN THEM IN PLACE FOR THE DURATION OF THE PROJECT OR UNTIL SUCH TIME THAT THEIR REMOVAL DOES NOT AFFECT THE COMPLETION OF THE PROJECT.

THE CONTRACTOR SHALL BE RESPONSIBLE FOR ALL AND ALL DAMAGE CAUSED BY HIM OR ANY SUBCONTRACTOR OR SUPPLIER CAUSED TO THE OWNER'S PREMISES.

ALL REPLACING, PATCHING, AND REPAIRING OF ALL MATERIALS AND SURFACES CUT OR DAMAGE IN THE EXECUTION OF THE WORK SHALL BE PERFORMED BY EXPERIENCED TRADES PEOPLE. SUCH REPAIRING, REPLACING AND/OR PATCHING SHALL BE DONE WITH ACCEPTABLE MATERIALS, IN SUCH A MANNER THAT ALL SURFACES SO REPAIRED OR REPLACED, WILL UPON COMPLETION OF THE WORK, MATCH THE SURROUNDING SIMILAR SURFACES.

THE DRAWINGS REPRESENT THE BUILDING, THEY DO NOT REPRESENT THE MEANS, METHODS, PROCEDURES, TECHNIQUES OR SEQUENCES OF CONSTRUCTION.

CONSTRUCTION NOTES:

ALL GLASS IN HAZARDOUS LOCATIONS AND ALL GLASS WITHIN 18" OF FLOOR, GLASS IN DOORS AND GLASS WITHIN 24" OF DOORS AND GLASS SUBJECT TO HUMAN IMPACT SHALL BE TEMPERED SAFETY GLASS. GLASS SHALL BE FIRMLY SUPPORTED ON ALL FOUR EDGES.

ALL EXITS SHALL BE OPERABLE FROM THE INSIDE WITHOUT THE USE OF A KEY OR SPECIAL KNOWLEDGE. MANUAL OPERATED EDGE OR SURFACE-MOUNTED FLUSH BOLTS ARE PROHIBITED. FIRE DOORS AND FRAME ASSEMBLIES TO BE LABELED BY AN APPROVED AGENCY AND HAVE SELF-CLOSERS THERE SHALL BE A FLOOR OR LANDING ON EACH SIDE OF A DOOR. LANDING SHALL NOT BE MORE THAN 1/2" LOWER THAN THE THRESHOLD OF ACCESSIBLE DOORS AND SHALL NOT EXCEED 1" ELSEWHERE.

LANDINGS SHALL BE LEVEL EXCEPT FOR EXTERIOR WHICH SHALL SLOPE 1/4" PER FT. (2% MAX.)

ALL HARDWARE SHALL CONFORM WITH THE AMERICANS WITH DISABILITIES ACT STANDARDS.

CONTRACTOR SHALL BE AWARE OF AND TAKE PRECAUTIONS DURING THE COURSE OF CONSTRUCTION TO PREVENT THE ENCAPSULATION OF MOISTURE AND THE CREATION OF CONDITIONS WHICH MIGHT RESULT IN THE GROWTH OF MOLDS AND BACTERIA.

DEFERRED SUBMITTALS:

THE FOLLOWING WORK SHALL BE A PART OF THE GENERAL CONTRACTOR'S SCOPE AND REQUIRES DESIGN AND SUBMITTAL TO JEFFERSON CITY, APPROVAL BY JEFFERSON CITY AND ISSUANCE OF SEPARATE PERMITS TO THEIR INSTALLATION:

- PLANT ENGINEERED MATERIALS (STEEL JOISTS)
- FIRE ALARM SYSTEMS
- ALUMINUM STOREFRONT GLAZING SYSTEM

SPECIAL INSPECTIONS:

THE FOLLOWING WORK SHALL REQUIRE SPECIAL INSPECTIONS PER ICC SECTION 1704 AND JEFFERSON CITY REQUIREMENTS: AS INDICATED BUT NOT LIMITED TO:

- EARTHWORK AND EXCAVATIONS
- CONCRETE
- REINFORCING
- MASONRY
- STEEL/WELDING
- HIGH STRENGTH BOLTS
- ANCHOR/EXPANSION/EPOXY BOLTS
- SMOKE DETECTORS (DUCT)

REFER TO S001 NOTES AND QUALITY REQUIREMENTS SPECIFICATION 014000.

PROJECT MANUAL:

REFER TO PROJECT MANUAL (UNDER SEPARATE COVER) FOR DETAILED PRODUCT INFORMATION AND INSTALLATION INFORMATION

LISTED MATERIAL/PRODUCTS:

ALL PRODUCTS LISTED BY I.C.C./N.E.R. NUMBERS (S) SHALL BE INSTALLED PER THE REPORT AND MANUFACTURER'S WRITTEN INSTRUCTIONS. PRODUCT SUBSTITUTIONS FOR PRODUCTS LISTED SHALL HAVE I.C.B.O. APPROVED EVALUATION REPORTS OR BE APPROVED AND LISTED BY OTHER NATIONALLY RECOGNIZED TESTING AGENCIES. ALL CONSTRUCTION SHALL CONFORM TO ALL APPLICABLE CODES AND ORDINANCES INCLUDING, BUT NOT LIMITED TO THOSE LISTED.

BUILDING INSULATION:

TYPICAL ROOF TO RECEIVE R-30 MIN. RIGID INSULATION.

ALL EXTERIOR WALLS TO RECEIVE R-19 MIN BATT OR RIGID INSULATION AS SHOWN ON SECTIONS.

SLIP RESISTANCE:

ALL PAVING, FLOORING, STAIRS, SIDEWALKS, DRIVEWAYS, ETC. SHALL BE FIRM STABLE AND SLIP-RESISTANT, ALL SHALL CONFORM TO ALL LOCAL AND NATIONAL STANDARDS FOR SLIP RESISTANCE.

WATERTIGHT/WEATHERTIGHT:

THE GENERAL CONTRACTOR IS RESPONSIBLE FOR CONSTRUCTING A COMPLETELY WATERTIGHT/WEATHERTIGHT FACILITY.

JOBSITE SAFETY:

NEITHER THE OWNER, ARCHITECT NOR ANY OF THE PROJECT TEAM ENGINEERS ASSUME ANY RESPONSIBILITY OR LIABILITY FOR JOBSITE SAFETY, SAFETY PROCEDURES OR PROGRAMS INCIDENT THERETO. ALL CONSTRUCTION MEANS, METHODS, SEQUENCES, PROCEDURES AND TECHNIQUES ARE SOLELY THE RESPONSIBILITY OF THE GENERAL CONTRACTOR.

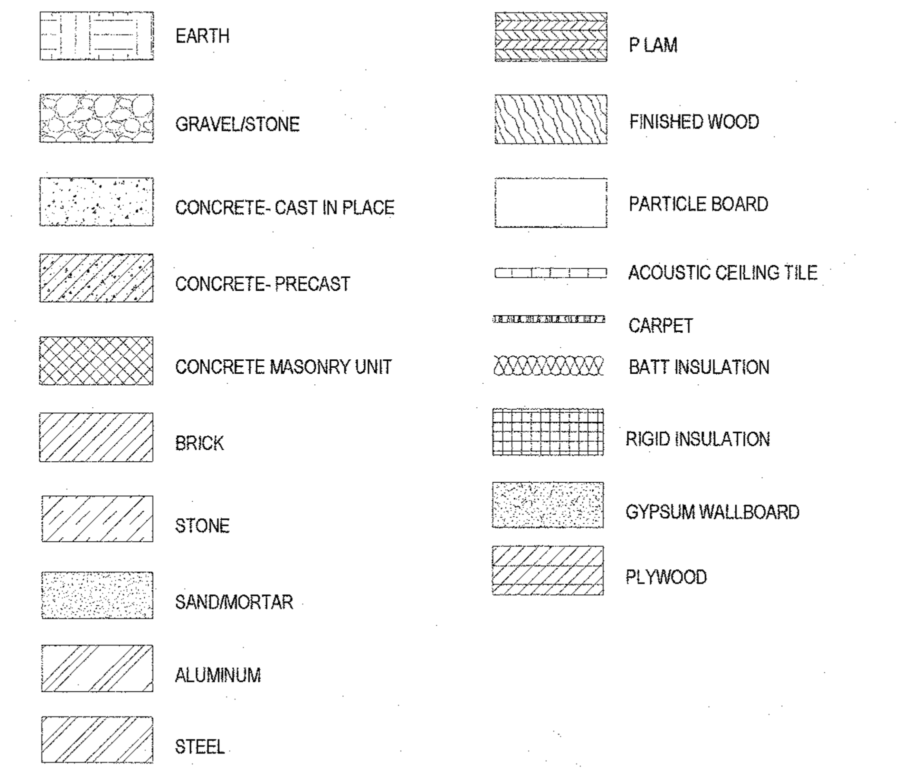

THE MATERIAL HATCH PATTERN KEY IS PROVIDED AS A GENERAL GRAPHIC REFERENCE ONLY. REFER TO MATERIAL NOTES AND LEGENDS FOR ACTUAL MATERIAL DESIGNATIONS. HATCHES PROVIDED ON FINISH PLANS, RCP'S, OR ANY OTHER DRAWING HAVING ITS OWN KEYED NOTATION AND GRAPHICAL LEGEND WILL SUPERCEDE THIS KEY.

D12 / G101 **DETAIL CUT PATTERNS**

SCALE: 1/4" = 1'-0"

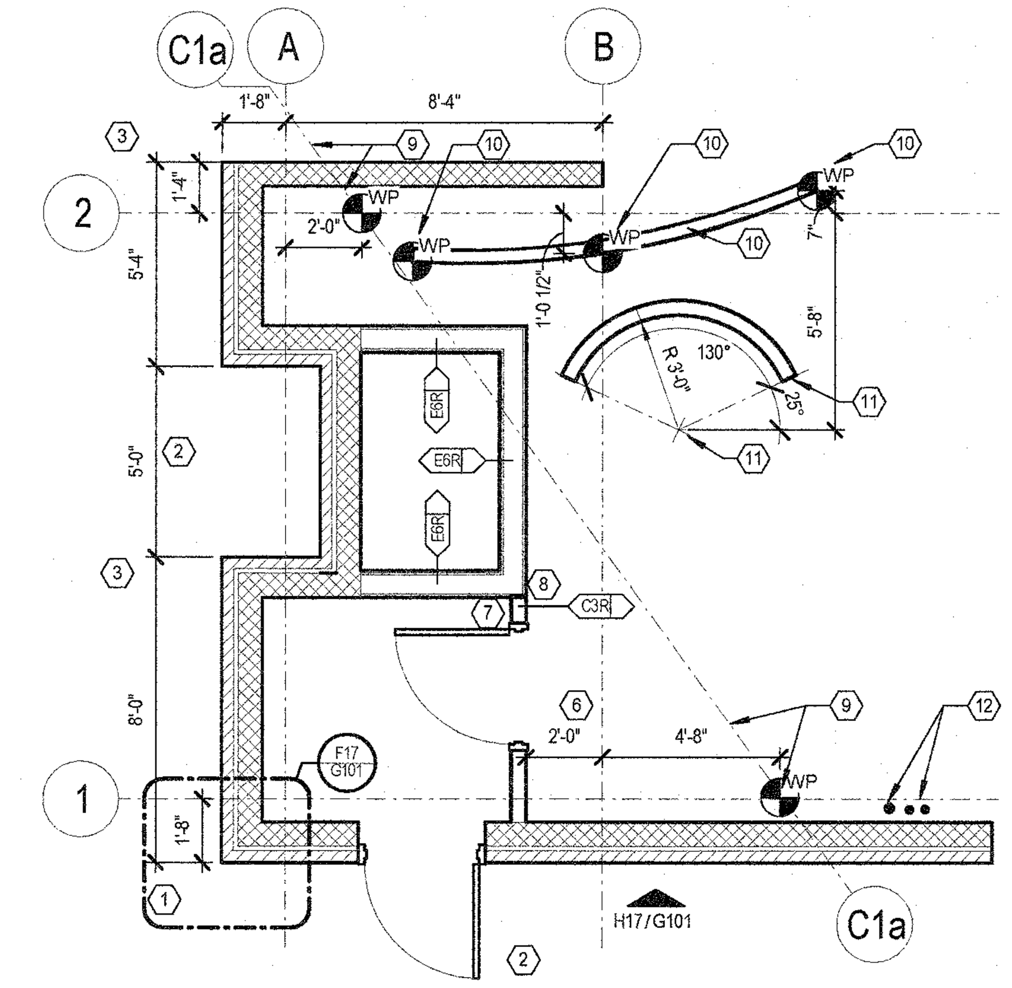

D17 / G101 **DIM GUIDE- PLAN**

SCALE: NO SCALE

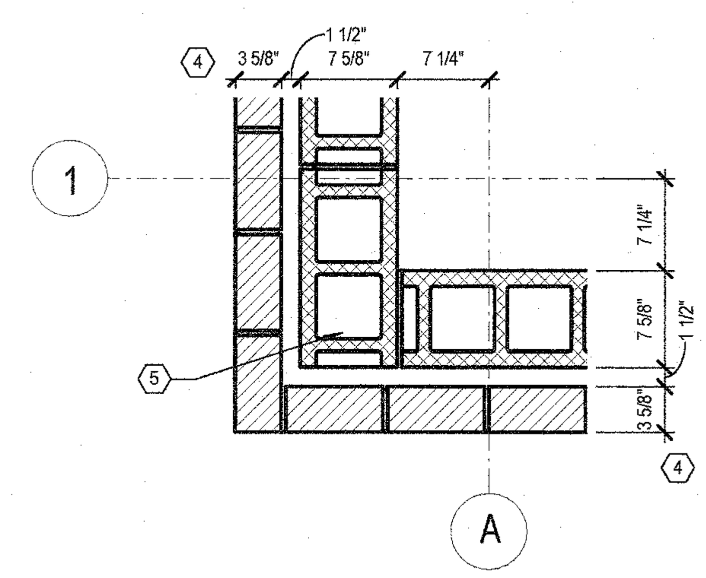

F17 / G101 **DIM GUIDE- DETAIL**

SCALE: NO SCALE

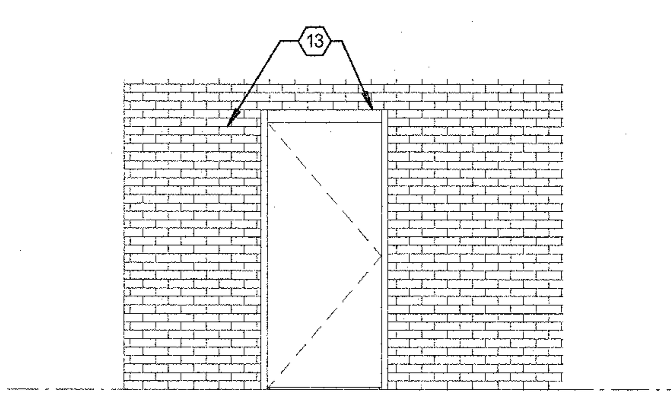

H17 / G101 **DIM GUIDE- ELEVATION**

SCALE: NO SCALE

DIMENSIONING NOTES

MARK	NOTE
1	MASONRY PLAN DIMENSIONS ARE NOMINAL AT SCALES NOT SHOWING INDIVIDUAL MODULES
2	OPENINGS ARE NOMINAL MASONRY OPENINGS AT SCALES NOT SHOWING INDIVIDUAL MODULES
3	EXTERIOR WALL DIMENSIONS ARE TO FINISH FACE (SEE WALL SECTION) UNLESS NOTED OTHERWISE
4	DRAWINGS WITH INDIVIDUAL MODULAR UNITS SHOWN ARE DIMENSIONED TO ACTUAL SIZE.
5	AT LOCATIONS OF STRUCTURAL MASONRY, UNIT TYPE IS SHOWN AS REPRESENTATION ONLY. REFER TO STRUCTURAL DRAWINGS FOR STRUCTURAL MASONRY CONSTRUCTION.
6	INTERIOR WALL DIMENSIONS ARE TO FINISH FACE OF PARTITION AS TAGGED, PER PARTITION SCHEDULE UNLESS NOTED OTHERWISE. ADDITIONAL FINISHES MAY EXIST. SEE FINISH PLAN.
7	WHERE DOORS ARE ADJACENT TO PERPENDICULAR WALLS, DIMENSION FROM FACE OF WALL TO EDGE OF FRAME IS 4 INCHES UNLESS NOTED OTHERWISE
8	WHERE WALLS OF VARYING FIRE AND/OR SMOKE RATING MEET OR INTERSECT, WALLS OF GREATER RATING SHALL RUN CONTINUOUS
9	ELEMENT POSITIONS BASED ON NON PARALLEL OR NON PERPENDICULAR RELATIONSHIPS TO OTHER ELEMENTS SHALL BE PLACED BY THE WORK POINTS DEFINED INCIDENTALLY FROM THE OTHER ELEMENTS.
10	RADIUSED ELEMENTS DEFINED BY MORE THAN 2 WORKPOINTS SHALL BE PLACED BY STRIKING AN ARC TANGENT TO ALL WORK POINTS. WHERE MORE THAN 3 WORKPOINTS ARE PRESENT, THE ARC AT EACH WORKPOINT SHALL BE TANGENT TO THE ADJACENT WORKPOINT ON EACH SIDE.
11	RADIUSED ELEMENTS DEFINED BY CENTERPOINTS, RADII, AND ANGLES SHALL BE PLACED BY MARKING THE CENTERPOINT AND ANGLE OFF THE OBJECTS THE DIMENSIONS ARE INCIDENT FROM.
12	OBJECTS AND INFORMATION SHOWN FROM OTHER TRADES IS FOR REFERENCE ONLY. OBJECTS AND INFORMATION SHOWN MAY NOT BE ALL INCLUSIVE. REFER TO THE APPROPRIATE CONSULTANTS DOCUMENTS FOR INFORMATION ON THESE SYSTEMS.
13	MASONRY COURSING LINES SHOWN IN ELEVATION REPRESENT NOMINAL DIMENSIONS. HORIZONTAL JOINT LINES ARE AT TOP OF MASONRY UNIT. VERTICAL JOINT LINES ARE AT CENTERLINE OF JOINT.

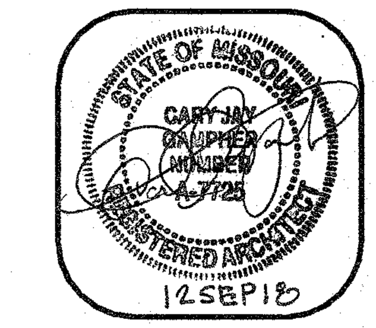

CENTRAL MISSOURI PROFESSIONAL SERVICES, INC.
CIVIL ENGINEER
MISSOURI STATE CERTIFICATE OF AUTHORITY # 001558

SSC ENGINEERING, INC.
MECHANICAL/ELECTRICAL/PLUMBING ENGINEER
MISSOURI STATE CERTIFICATE OF AUTHORITY # 001244

SSC ENGINEERING, INC.
STRUCTURAL ENGINEER
MISSOURI STATE CERTIFICATE OF AUTHORITY # 001244

The Architects Alliance inc.

Missouri State Certificate of Authority # 000143

631 West Main Street
Jefferson City, Missouri
(573) 636-5000 phone

GENERAL INFORMATION

MISSOURI SOYBEAN INNOVATION CENTER
NEW OFFICE BUILDING

734 S. COUNTRY CLUB DRIVE
JEFFERSON CITY, MISSOURI

PROJECT NO. 1613

DATE: SEP. 12, 2018

G101